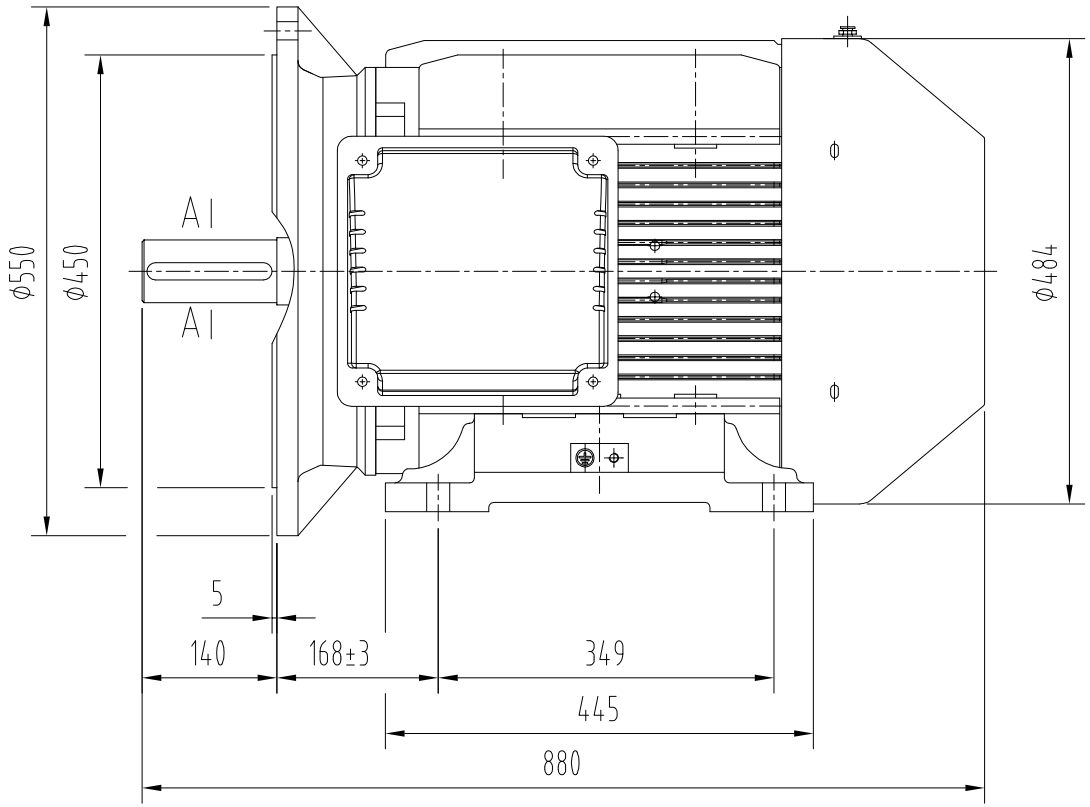

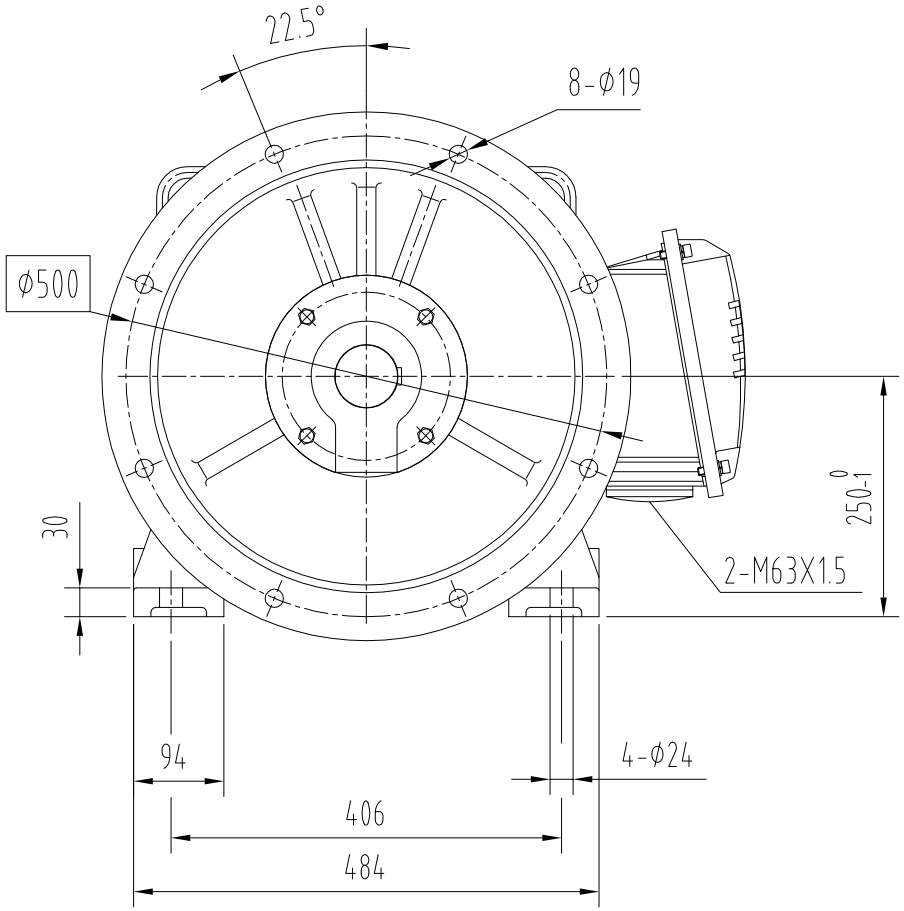

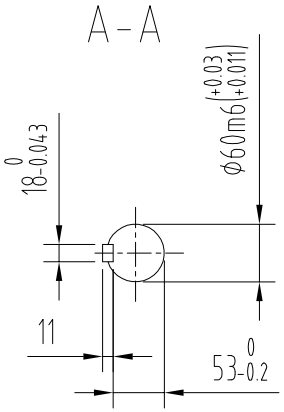

250M-B35-2P-M3
MOTOR OUTLINE
EMT OMEC